SMITH® JAY R. SMITH MFG. CO.®
MEMBER OF MORRIS GROUP INTERNATIONAL
POST OFFICE BOX 3237
MONTGOMERY, ALABAMA 36109-0237 (USA)
TEL: 334-277-8520 FAX: 888-377-7818 www.jrsmith.com
CUSTOMER DRIVEN SINCE 1926
MEMBER OF:

LOCATION

SPECIAL PURPOSE DRAINS

PIT OR DEPRESSED AREA DRAIN

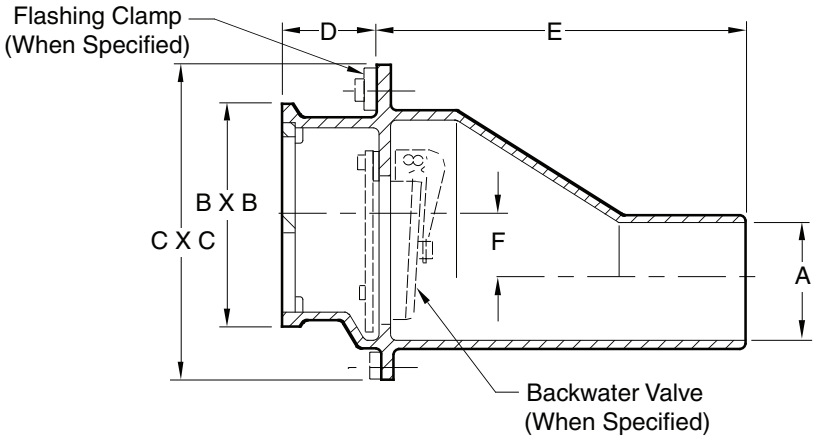

Fig. 2090S. . . . SPIGOT OUTLET

A PIPE SIZE	B x B	C x C	D	E	F	Free Area SQ. IN. (SQ CM)
03 (75)	6 3/4(170) x 9 1/2(240)	10 1/4(260) x 12(305)	3 (76)	11 1/4 (285)	2 3/4 (70)	16 1/2 (106)
04 (100)	6 3/4(170) x 9 1/2(240)	10 1/4(260) x 12(305)	3 (76)	11 1/4 (285)	2 1/4 (57)	16 1/2 (106)
05 (125) & 06 (150)	7 3/4(195) x 11(280)	9 3/4(250) x 13(330)	4 (100)	13 1/4 (335)	1 1/4 (32)	24 1/2 (158)
08 (200)	12 1/2(330) x 14 1/2(370)	17 1/4(440) x 19(485)	4 (100)	22 (560)	4 3/4 (120)	56 (361)

REGULARLY FURNISHED:
Duco Cast Iron Body and Secured Grate.

VARIATIONS:
- ☐ Flashing Clamp -C
- ☐ Backwater Valve -V

OPTIONAL MATERIALS:
- ☐ Galvanized -G
- ☐ Polished Bronze Face -PB
- ☐ Nickel Bronze Face -NB

NOTE: These valves, when supplied with optional backwater valve offer protection against backwater surges. Backflow is prevented when not obstructed by debris or sludge. Use for gravity flow only, not pressurized application.

NOTE: Dimensions shown in Parentheses are in millimeters.

REV.	DATE	DESCRIPTION	BY	CKD. BY
E	10-8-25	Removed * and Text	TB	CL
D	8-10-23	Removed Function	HS	CL
C	09/03/10	Changed Table, Changed Note	JJ	CL
B	2-11-93	Chg'd BWV	EMB	JCS

WEIGHT POUNDS | VOLUME CUBIC FEET | FIGURE NUMBER 2090

E | DRAWING NUMBER S2090 | SIZE A | SCALE: NONE | DATE: 4-10-70 | APPROVED BY: | CHECKED BY: BH | DRAWN BY: JLS | FIGURE NUMBER 2090

WE CAN ASSUME NO RESPONSIBILITY FOR USE OF SUPERSEDED OR VOID DATA
DIMENSIONS ARE SUBJECT TO MANUFACTURERS TOLERANCE AND CHANGE WITHOUT NOTICE

WARNING: Cancer and Reproductive Harm - www.P65Warnings.ca.gov